FACTSHEETBOOK

Baling

Product

Big Bale Press

ROYAL APOLLO
Group

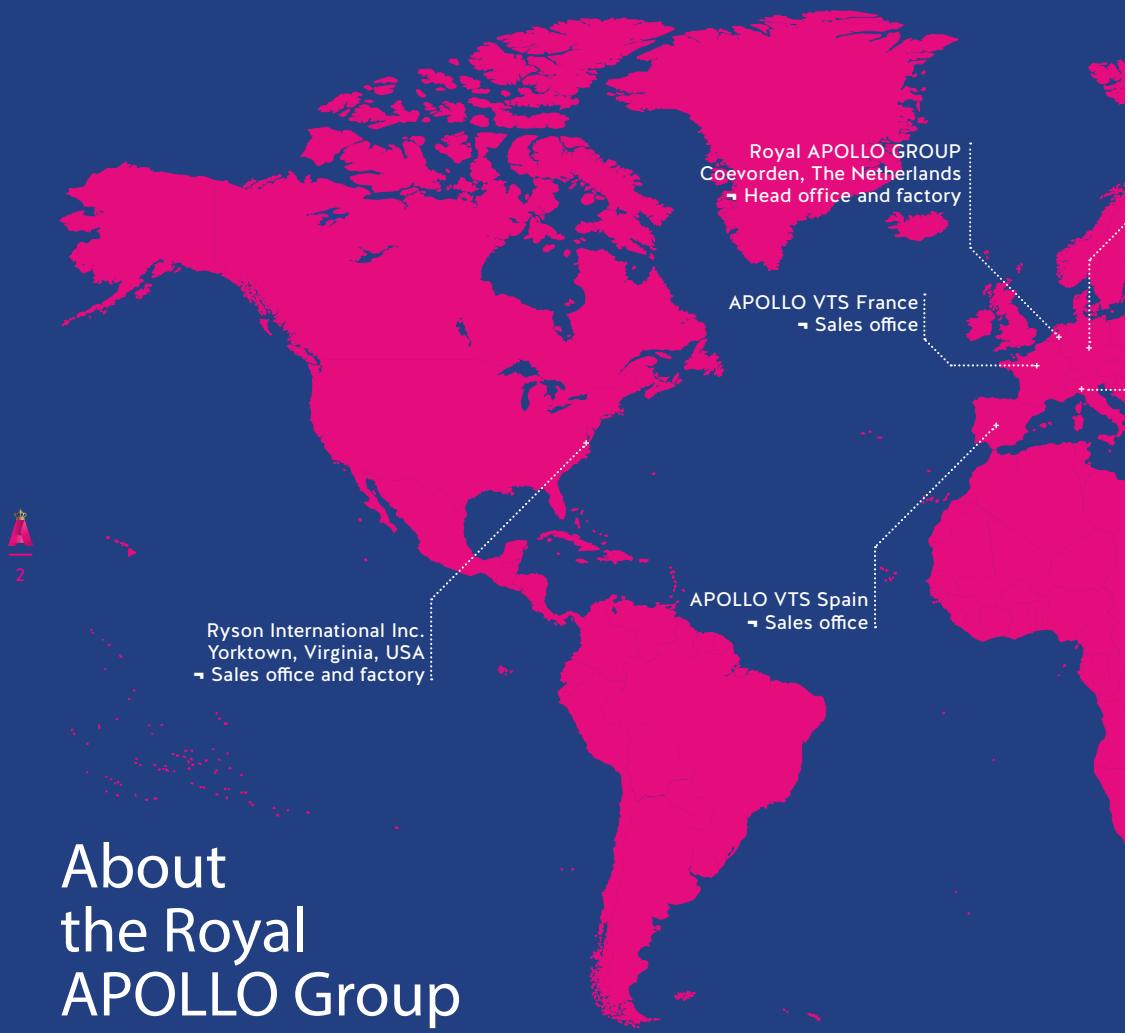

About the Royal APOLLO Group

Every day we strive to develop and deliver products and services that help our customers grow. Because standing still brings you nowhere, it might even move you backwards. Especially when it comes to the production lines of our customers.

ALWAYS MOVING DREAMS TO REALITY

Standing on the shoulders of her ancestors, Claudia is the 6th generation of the Van den Pol family. A family of entrepreneurs that grew from a blacksmith that started in 1847 into a worldwide player in a niche market. Being a worldwide player, means being close to our global customers.

Claudia and all Royal APOLLO employees are determined to realize the long-term goals of Royal APOLLO and their customers with energy, drive and vision.

Product

BIG BALE PRESS

Heavy Version

Light Version

Designed to handle...

BIG BALE PRESS

Mulch

Bark

Straw Fibre

All kinds of Peat and Substrates

Compost

Wood Fibre

Wood Shaving

Wood Chips

Refuse derived Fuel

Cellulose insolation

Corn Silage

Rice Husk

The Big Bale Presses are ideal for compressing, packing and palletizing bulk products. The Big Bale Presses are used for many types of compressible and cohesive products as indicated in the pictures above.

The three-in-one installation of the Big Bale Press reduces capital outlay. The Big Bale Press keeps foil consumption to a minimum by stretching the wrapping foil around the bale.

Big Bale Press
Heavy Version

A compact and fully automatic installation for compressing, packing and palletizing bulk products. The Big Bale Press is used for many types of compressible and cohesive products. This three-in-one installation reduces capital outlay. The Big Bale Press keeps foil consumption to a minimum by stretching the wrapping foil.

Apart from a variable Big Bale volume of 2 m^3 up to 7 m^3 and a Big Bale height of 1 meter up to 2.5 meter, the Big Bale Press has a production capacity up to 30 bales per hour in one compression cycle, depending on the infeed capacity and the type of product. By using the patented press table, it is possible to achieve high pressures - up to 65 tons - without damaging the pallet.

The Big Bale is stable and sealed at the top and the bottom side. This limits overheating to the minimum, prevents contamination of the product and working area and will make outdoor storage possible. Thanks to compaction and the flexible Big Bale dimensions, your product can be transported, delivered and stored in the most efficient way.

Characteristics

- Can be used for all compressible and cohesive bulk products with a bulk weight of 150 to 900 kg per m³
- Variable compression of 1.5:1 to 5:1*
- Weight of Big bales of 250 up to 2,000 kg*
- Can be processed automatically
- Can be stored horizontally or vertically
- Bales produced with or without pallet
- Can be easily released without loss of structure and volume*
- Savings on foil by the pre-stretch mode and savings on the fully automatic mode

*Depending on the product

Baling concept

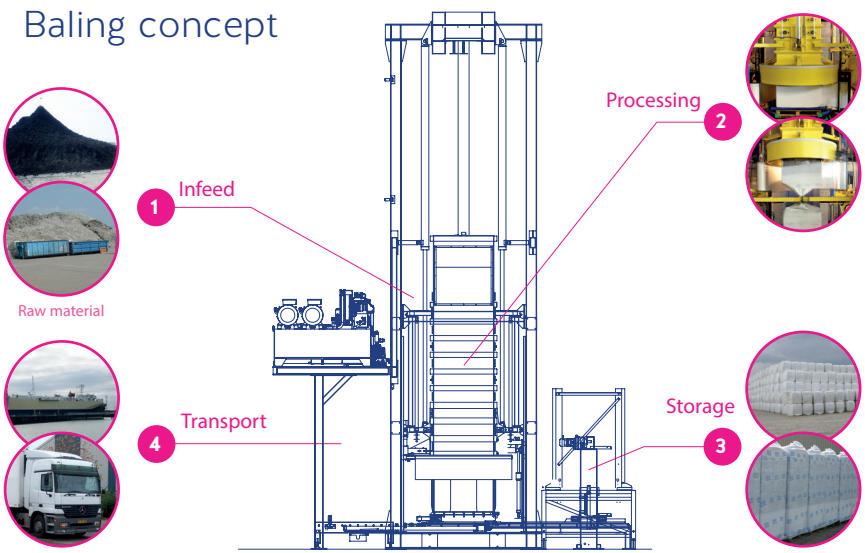

Big Bale Press
Light Version

If the Big Bale Press Heavy Version is too "heavy" for your capacity needs, the Light Version is a better solution. The Light Version of the Big Bale Press, is created for companies with lower production capacity. Therefore the investment costs will be lower compared to the Heavy Version.

The production capacity of the Light Version is up to 17 bales per hour in one compression cycle and 11 bales per hour in two compression cycles.

If there is a constant need of higher production capacity, it is possible to upgrade the Light Version to the Heavy Version by changing the hydraulic and electrical power pack. After the upgrade, the fully equipped Big Bale Press Heavy Version can produce up to 30 bales per hour.

Characteristics

- Can be used for all compressible and cohesive bulk products with a bulk weight of 150 to 900 kg per m³
- Variable compression of 1.5:1 to 5:1*
- Weight of Big bales of 250 up to 2,000 kg*
- Can be processed automatically
- Can be stored horizontally or vertically
- Bales produced with or without pallet
- Can be easily released without loss of structure and volume*
- Savings on foil by the pre-stretch mode and savings on the fully automatic mode

*Depending on the product

Technical Specifications

Aspect		Specs Light Version	Specs Heavy Version
Pressure		65 tons / 200 bar	65 tons / 200 bar
Capacity		Up to 17 Big bales per hour * (in one compression cycle)	Up to 30 Big bales per hour * (in one compression cycle)
Electrical supply		400V / 3-phase / 50Hz / 125A (or different)	400V / 3-phase / 50Hz / 160A (or different)
Dimensions	Press	3.0 x 3.0 x 10.3 m	3.0 x 3.0 x 10.3 m
	Roller conveyor	2.2 x 1.3 x 1.5 m	2.2 x 1.3 x 1.5 m
	Pallet stacker	1.7 x 1.9 x 2.1 m	1.7 x 1.9 x 2.1 m
Total weight of press		Approx. 19 tons	Approx. 19 tons
PLC		Siemens	Siemens

*Depending on the product

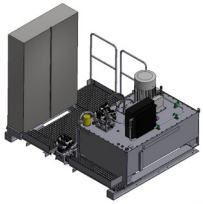

Light

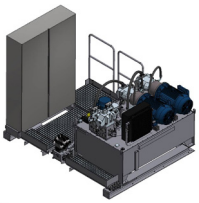

Heavy

Upgrade from light to heavy

- Low investment costs with the machine quality of APOLLO ISC
- Possibility to upgrade from light to heavy without changing the basis structure of the press
- No need to buy an extra bunker and infeed conveyor to upgrade the production capacity
- No extra production surface needed

2 Step investment

Start your Big Bale activity with low investment costs at your required production capacity. When your sales has grown: Bring your existing machine to the next capacity level by changing the hydraulic and electric power pack. This results in the Big Bale Press Heavy Version, known for its reliability and quality.

Benefits

Royal APOLLO works with 175+ years experience. Alongside that, our clients benefit from:

- Customised solutions to suit specific requirements
- Instant remote support service 'APOLLO Assists'
- Stock of standard components for fast delivery
- Extensive range of accessories
- Global representation relying on our global Customer Support offices and Service Organisation

A global family driven company

Joyful workplace

The company feels like a playground, you can make mistakes, be open and vulnerable while at the same time, the energy is exciting, joyful and innovative.

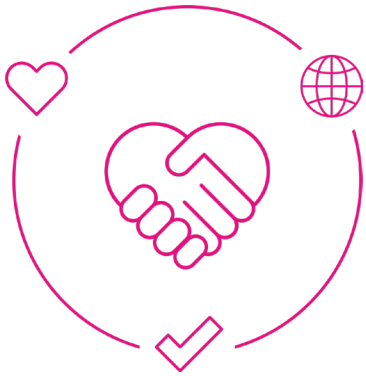

Global partner

APOLLO's people show the joy, passion and expertise to develop the best machines & deliver the best service globally! Everybody knows the direction of the company and the goals we have set. Everybody in his or her own way is actively contributing towards reaching our goals.

Result- and quality driven

Royal APOLLO is the company you need to talk to about your logistic challenges. We bring 175 years of experience. This is carried by our people, our vibe, our outstanding service and our innovative atmosphere. It's only obvious that we produce machines with the highest quality standards!

Contact

Royal APOLLO Group
Head Office
Modem 28
7741 MJ Coevorden
+31 524 51 50 51
info@apollobv.com
www.apollobv.com

ROYAL APOLLO
Group

The Royal APOLLO GROUP consists of:
APOLLO VTS, APOLLO ISC, APOLLO LS,
RYSON International and
APOLLO Service
apollobv.com